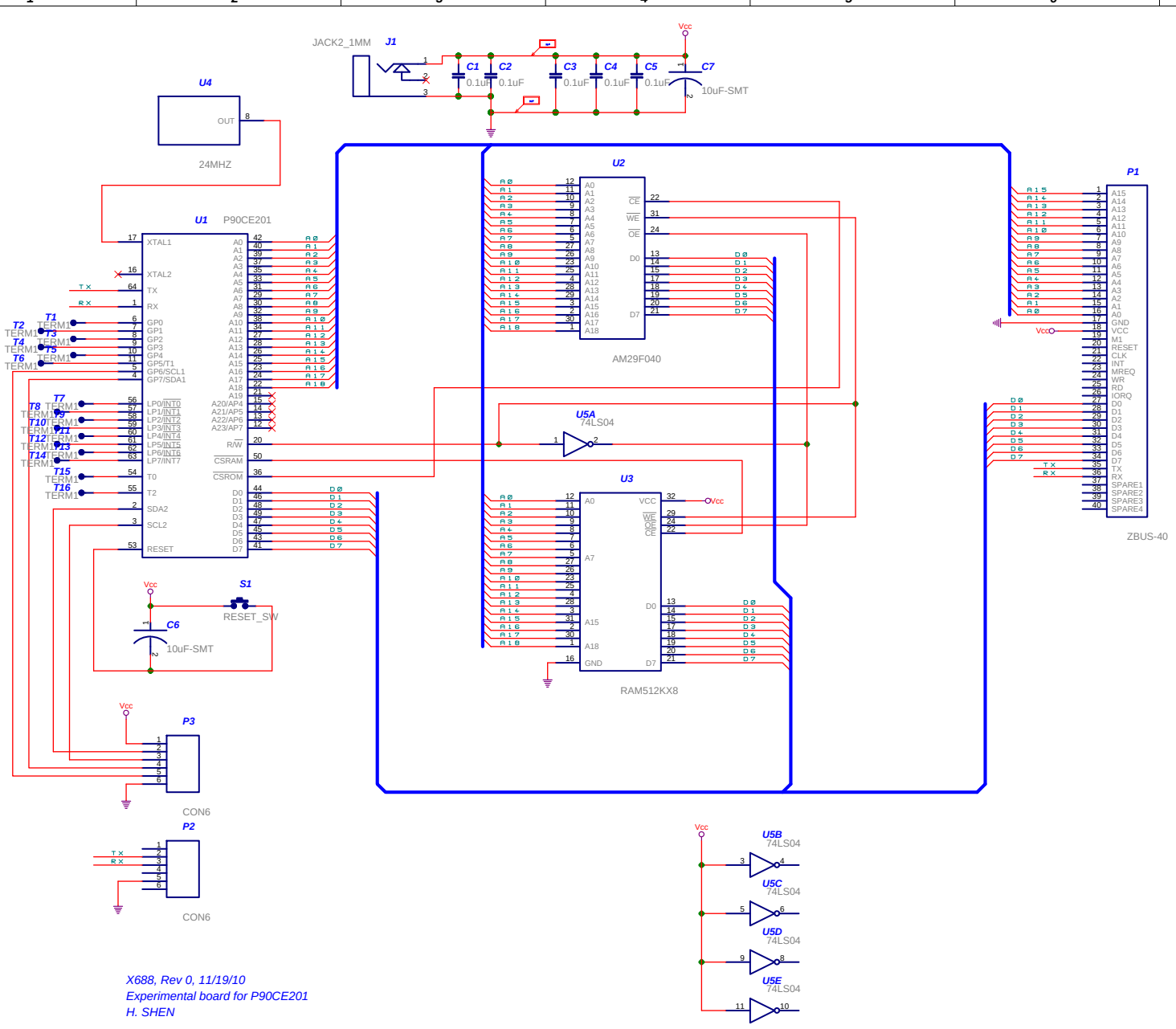
JACK2_1MM
J1
C1
C2
C3
C4
C5
C7
0.1uF
10uF-SMT
Vcc
U4
OUT
24MHZ
U1
P90CE201
XTAL1
XTAL2
TX
RX
GP0
GP1
GP2
GP3
GP4
GP5/T1
GP6/SCL1
GP7/SDA1
LP0/INT0
LP1/INT1
LP2/INT2
LP3/INT3
LP4/INT4
LP5/INT5
LP6/INT6
LP7/INT7
T0
T2
SDA2
SCL2
RESET
R/W
CSRAM
CSROM
A20/AP4
A21/AP5
A22/AP6
A23/AP7
T1
T2
T3
T4
T5
T6
T7
T8
T9
T10
T11
T12
T13
T14
T15
T16
TERM1
S1
RESET_SW
C6
10uF-SMT
P3
CON6
P2
CON6
U2
AM29F040
CE
WE
OE
U5A
74LS04
U3
RAM512KX8
VCC
GND
P1
ZBUS-40
GND
VCC
M1
RESET
CLK
INT
MREQ
WR
RD
IORQ
SPARE1
SPARE2
SPARE3
SPARE4
U5B
74LS04
U5C
74LS04
U5D
74LS04
U5E
74LS04
X688, Rev 0, 11/19/10
Experimental board for P90CE201
H. SHEN