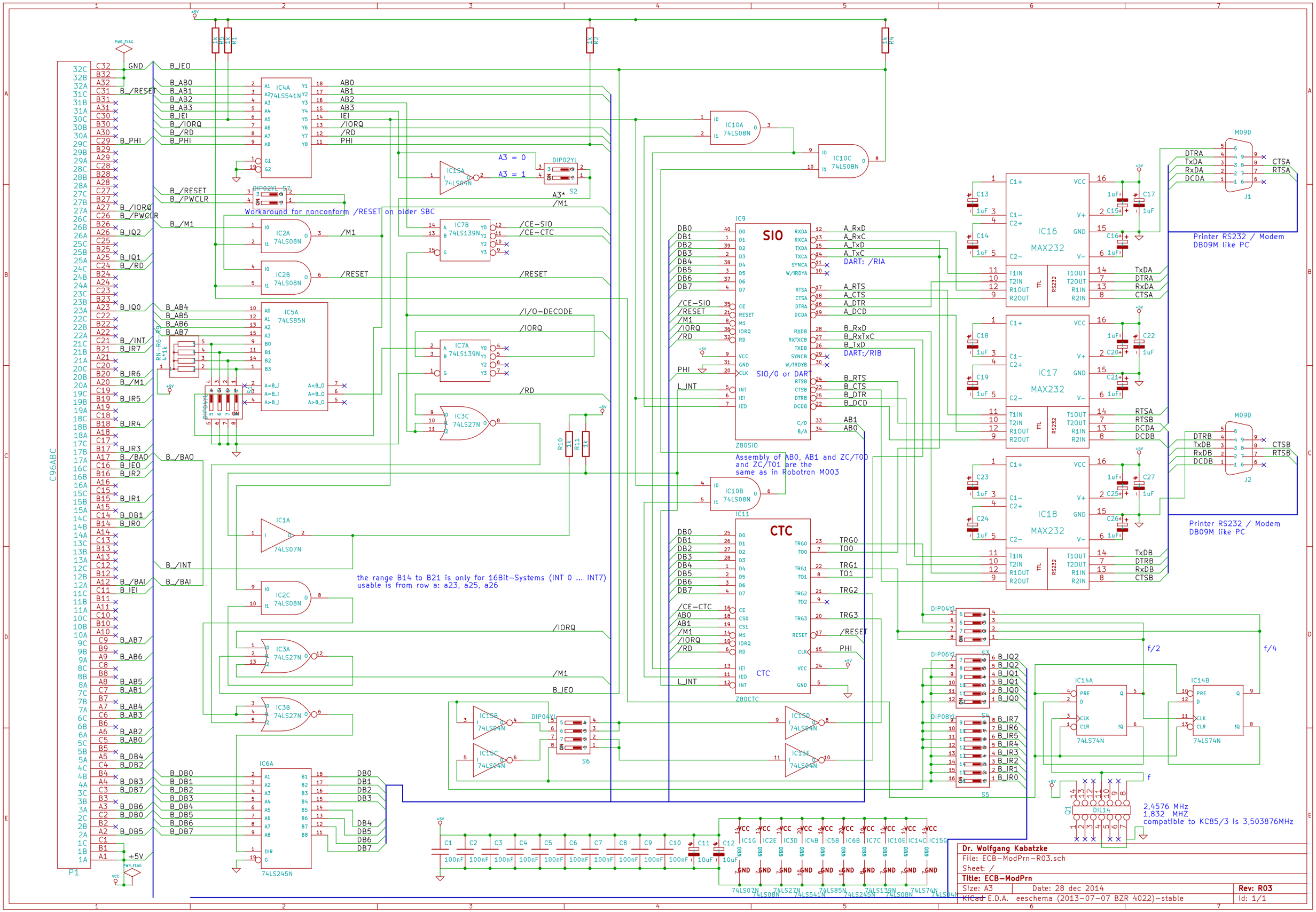
C96ABC
P1
IC4A 74LS541N
IC5A 74LS85N
IC6A 74LS245N
IC7A 74LS139N
IC7B 74LS139N
IC2A 74LS08N
IC2B 74LS08N
IC2C 74LS08N
IC3A 74LS27N
IC3B 74LS27N
IC3C 74LS27N
IC1A 74LS07N
IC15A 74LS04N
IC15B 74LS04N
IC15C 74LS04N
IC15D 74LS04N
IC15E 74LS04N
IC10A 74LS08N
IC10B 74LS08N
IC10C 74LS08N
IC9 SIO
Z80SIO
SIO/0 or DART
IC11 CTC
Z80CTC
IC16 MAX232
IC17 MAX232
IC18 MAX232
M09D
J1
J2
Printer RS232 / Modem
DB09M like PC
IC14A 74LS74N
IC14B 74LS74N
Q1 DIL14
2,4576 MHz
1,832 MHZ
compatible to KC85/3 is 3,503876MHz
f/2
f/4
A3 = 0
A3 = 1
Workaround for nonconform /RESET on older SBC
the range B14 to B21 is only for 16Bit-Systems (INT 0 ... INT7)
usable is from row a: a23, a25, a26
Assembly of AB0, AB1 and ZC/T00
and ZC/T01 are the
same as in Robotron M003
DART: /RIA
DART:/RIB
Dr. Wolfgang Kabatzke
File: ECB-ModPrn-R03.sch
Sheet: /
Title: ECB-ModPrn
Size: A3
Date: 28 dec 2014
Rev: R03
KiCad E.D.A. eeschema (2013-07-07 BZR 4022)-stable
Id: 1/1