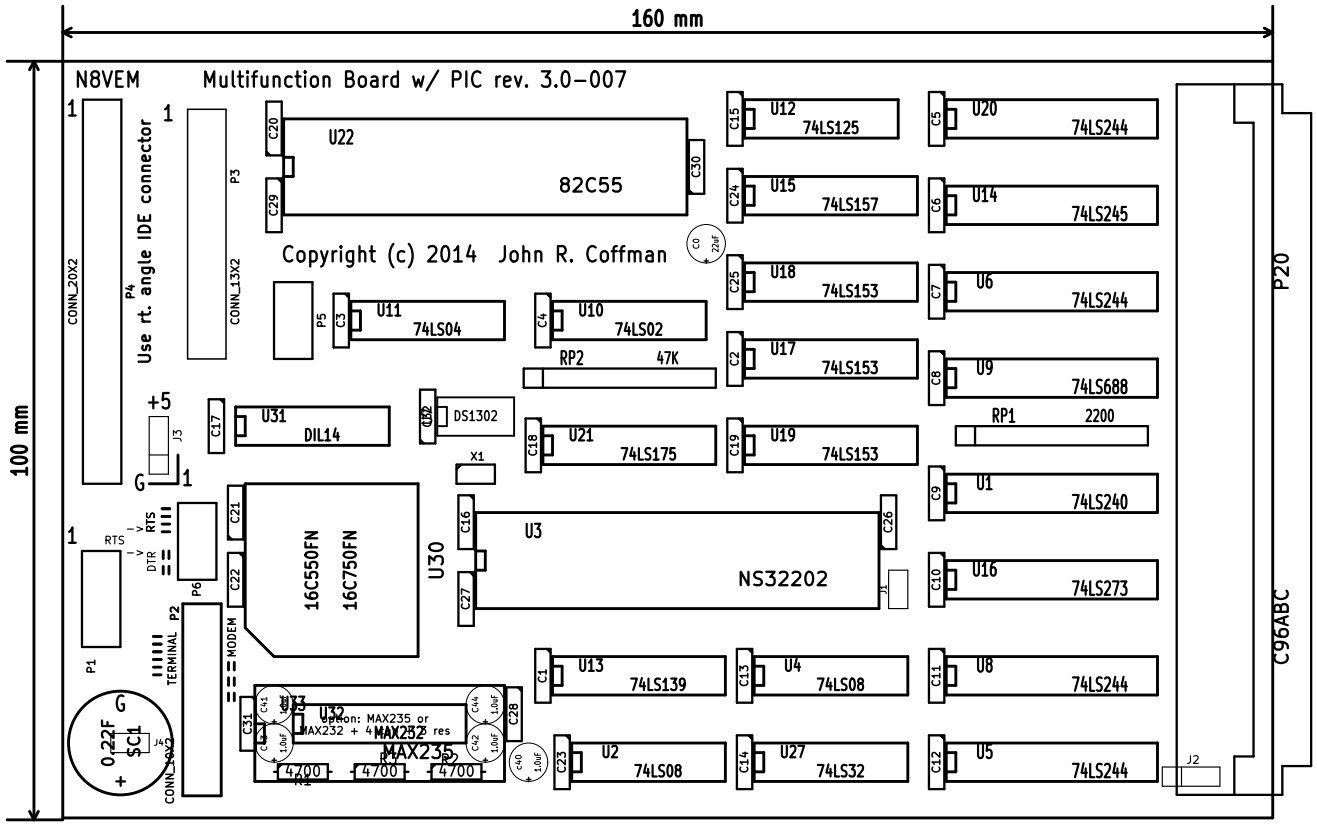
160 mm
100 mm
N8VEM
Multifunction Board w/ PIC rev. 3.0-007
Copyright (c) 2014 John R. Coffman
Use rt. angle IDE connector
CONN_20X2
CONN_13X2
P3
P4
P5
P6
P1
P2
P20
C96ABC
U22
82C55
U11
74LS04
U10
74LS02
RP2
47K
U31
DIL14
DS1302
X1
U21
74LS175
U12
74LS125
U15
74LS157
U18
74LS153
U17
74LS153
U19
74LS153
RP1
2200
U20
74LS244
U14
74LS245
U6
74LS244
U9
74LS688
U1
74LS240
U16
74LS273
U8
74LS244
U5
74LS244
U13
74LS139
U4
74LS08
U2
74LS08
U27
74LS32
U3
NS32202
U30
16C550FN
16C750FN
U32
MAX235
option: MAX235 or
MAX232 + 4700 res
R1
R2
R3
4700
+5
J3
J4
J1
J2
RTS
DTR
TERMINAL
MODEM
0.22F
SC1
CONN_6X2

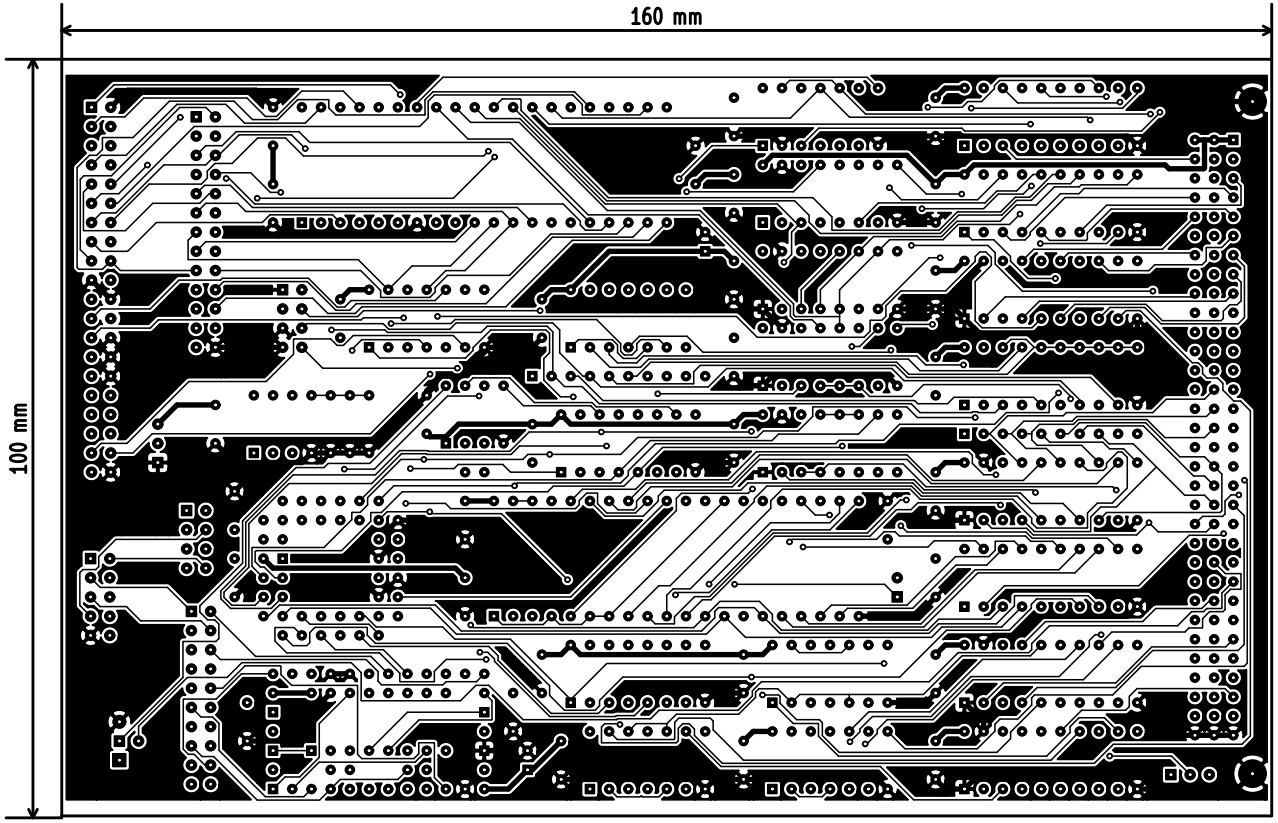
160 mm
100 mm

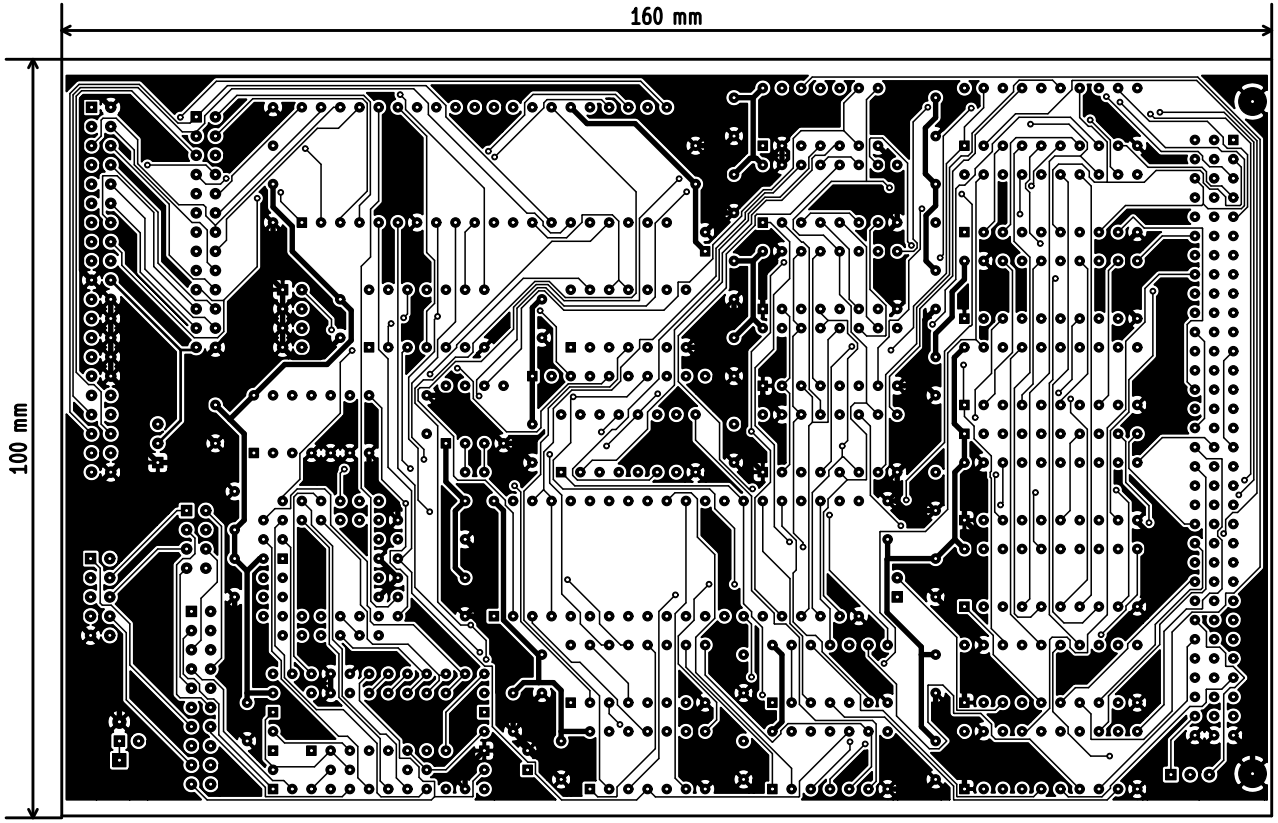
160 mm
100 mm